FINE FIXTURES
FOR A LIFE OF STYLE

SPECIFICATION SHEET

STEEL MEDICINE CABINET

24”x30”

DIMENSIONS:

Overall Dimensions: 24″W x 30″H x 5″D
Cabinet dimensions: 24″W x 30″H x 4.5″D
Door dimensions: 24″W x 30″H x 0.5″D

FEATURES:

- High-strength steel with white painted finish, Rustproof and clean look.
- Frameless mirror door,concealed beveled edge pull handle.
- Reversible mounting: left-hand or right-hand door installation available
- Two adjustable shelving for added functionality.
- Soft touch hinges for noise-free closure.
- Mounting hardware included and easy to install

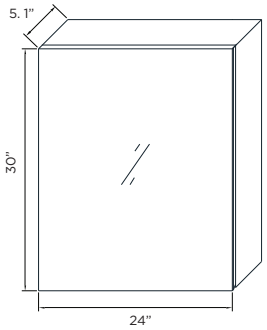

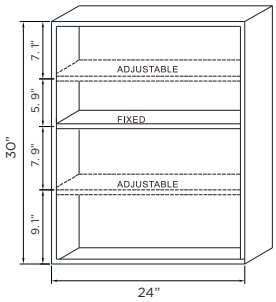

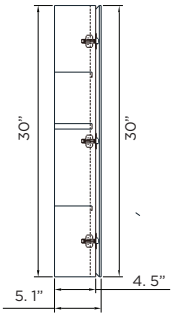

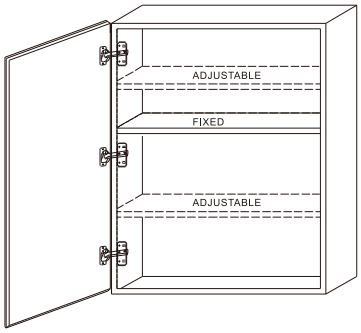

Material:	Cold rolled Steel+Copper-free Mirror
Color:	White painted
Mounte Style:	Surface Mount
Shape:	Rectangular
Shelves:	Adjustable shelves*2+Fixed shelf*1
Hinges:	100 degree Soft close hinge*3

MODEL# SM2430