FINE FIXTURES

SPECIFICATION SHEET

APRON BATHTUB

WHITE - LEFT HAND

60” X 32”

Specifications:

Width: 60”
Depth: 32”
Height: 18”

Capacity: 60 Gallons
Weight: 70.5 Lbs.
Soaking depth: 13 1/2”
Backrest Angle: 118.4°

Features:

- Available in left and right-hand installation.
- High-gloss acrylic and fiberglass material.
- Integral apron with traditional styling.
- Sloped lumbar support for more comfort.
- For recessed installation
- Pre-leveled tub base for easier installation.
- Fixed tile flange prevents water from seeping behind the wall
- Convenient step-in height
- Storage ledge for accessibility

Included Parts:

- Bathtub

Materials:

- Acrylic and fiberglass reinforcement.

Bathtub Color:

White

ADA COMPLIANT

ADA compliant when installed to the specific requirements of the ADA regulations, with a total height of 17” to 19” above finished floor.

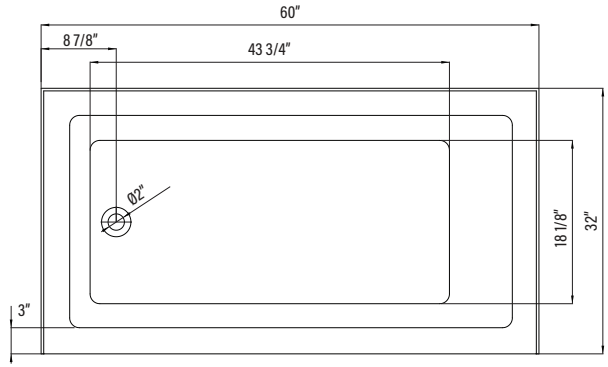

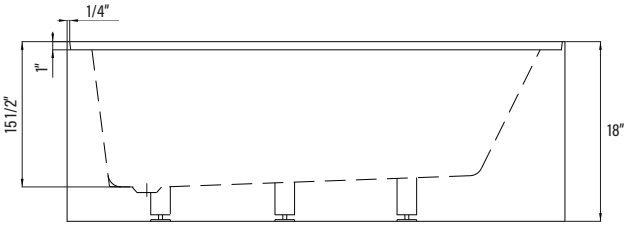

08.20.2024

MODEL# BTA302-L