FINE FIXTURES®

INSTALLATION MANUAL

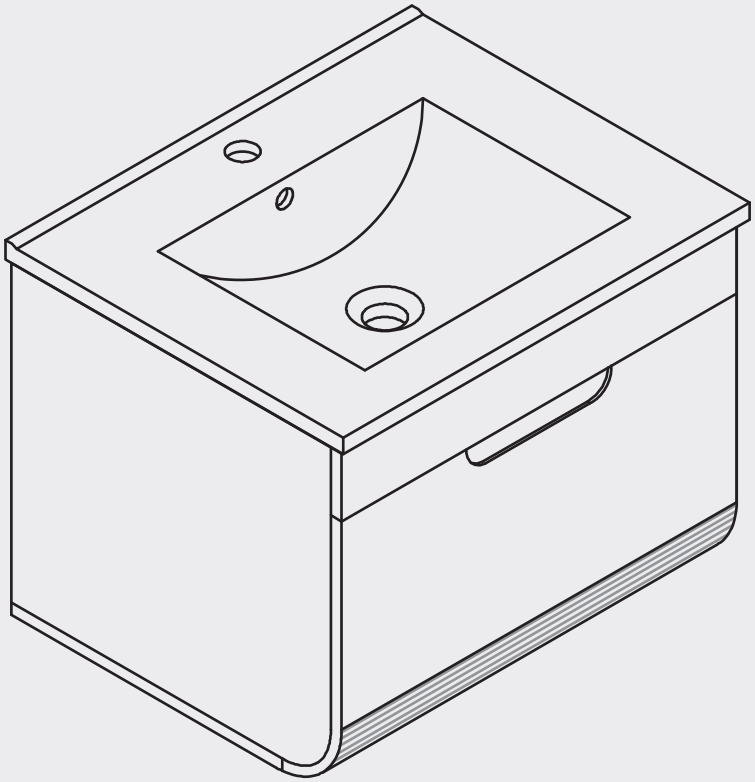

ELMONT VANITY

MODEL# EM22

08/25/2026

YouTube

Follow us on YouTube
for updated step-by-step
installation videos.

Failure to read these instructions prior to installation may result in personal injury, property damage, or product failure. Manufacturer assumes no responsibility for product failure due to improper installation.

WARRANTY & LIABILITY

- The limited warranty is void for any commercial installation.
- Compliance with local building and plumbing codes is the responsibility of the installer and homeowner. Codes may vary by state and municipality.
- We do not provide compliance certifications for this product.
- Under no circumstances shall the manufacturer, distributor, or retailer be liable for any incidental, consequential, or water-related damages arising from the use or installation of this product.
- We are not responsible for any costs related to installation, reinstallation, removal, transportation, labor, or subsequent damage in the event of a product defect.

IMPORTANT SAFETY INSTRUCTIONS

- Comply with all applicable local building and plumbing codes.
- Professional installation by a licensed plumber and contractor is strongly recommended.
- Follow the enclosed installation instructions. Alternative methods may be appropriate depending on site conditions.
- Prior to installation, properly frame the shower alcove, install the curb, and secure 2x10 blocking in the stud bays around the perimeter of the shower base.
- If you are uncertain about any installation step, consult a qualified professional.

PLUMBING

- Confirm the model fits the intended location and that the drain outlet is properly positioned before installation.
- The minimum shower trap size for new installations is 2 inches.
- Maintain a minimum slope of 1/4 inch per foot for proper drainage.
- Allow the product to acclimate to room temperature for at least 30 minutes prior to installation.

We reserves the right to change, update, modify, alter, redesign this manual/product or its policies without prior notice!
It is your responsibility to visit the website to download or contact customer service for the most updated version of the installation instructions.
We shall not be liable for any injuries or property damages in connection with this product during installation or use of this product!

SUGGESTED TOOLS & MATERIALS:

TOOLS & MATERIALS::

Soft Cloth or Blanket
Silicone
Caulk Gun
Tape Measure
Hammer
Safety Glass
Knife
Marker
Philips Screwdriver
Level
Putty Knife
Drill
Drill Bit

COMPONENTS AND HARDWARE:

NO.	Draw	QTY
A		4
B		4
C		4

DIMENSIONS / TECHNICAL DATA:

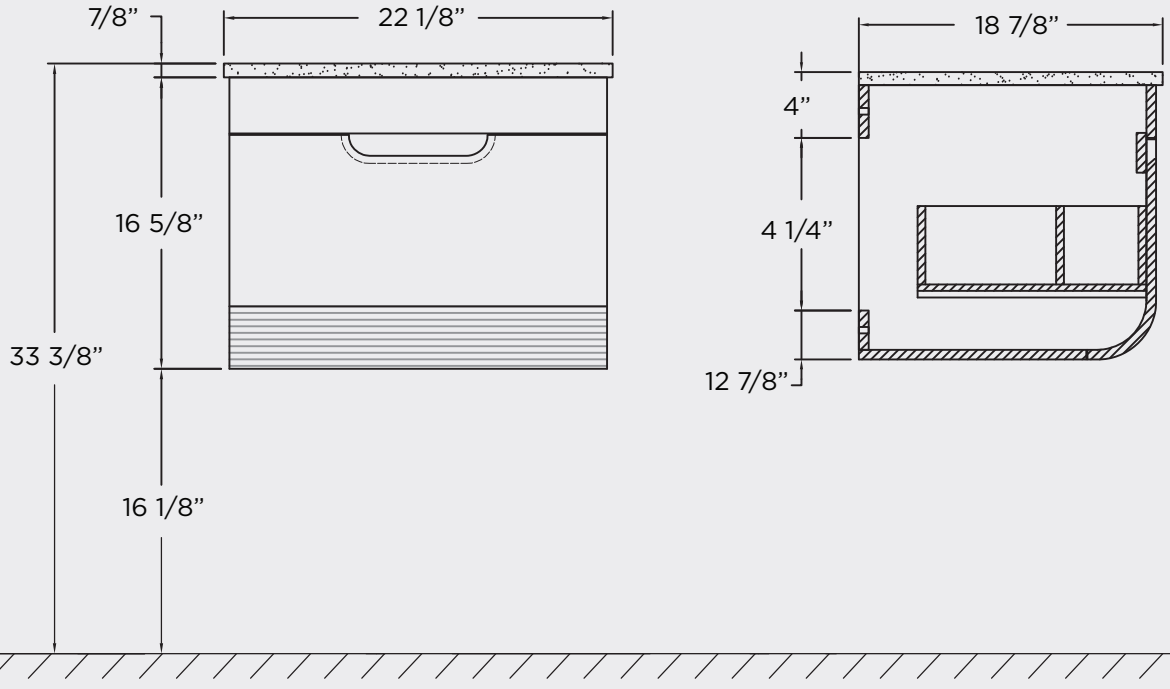

MODEL# EM22

INSTRUCTIONS:

1.

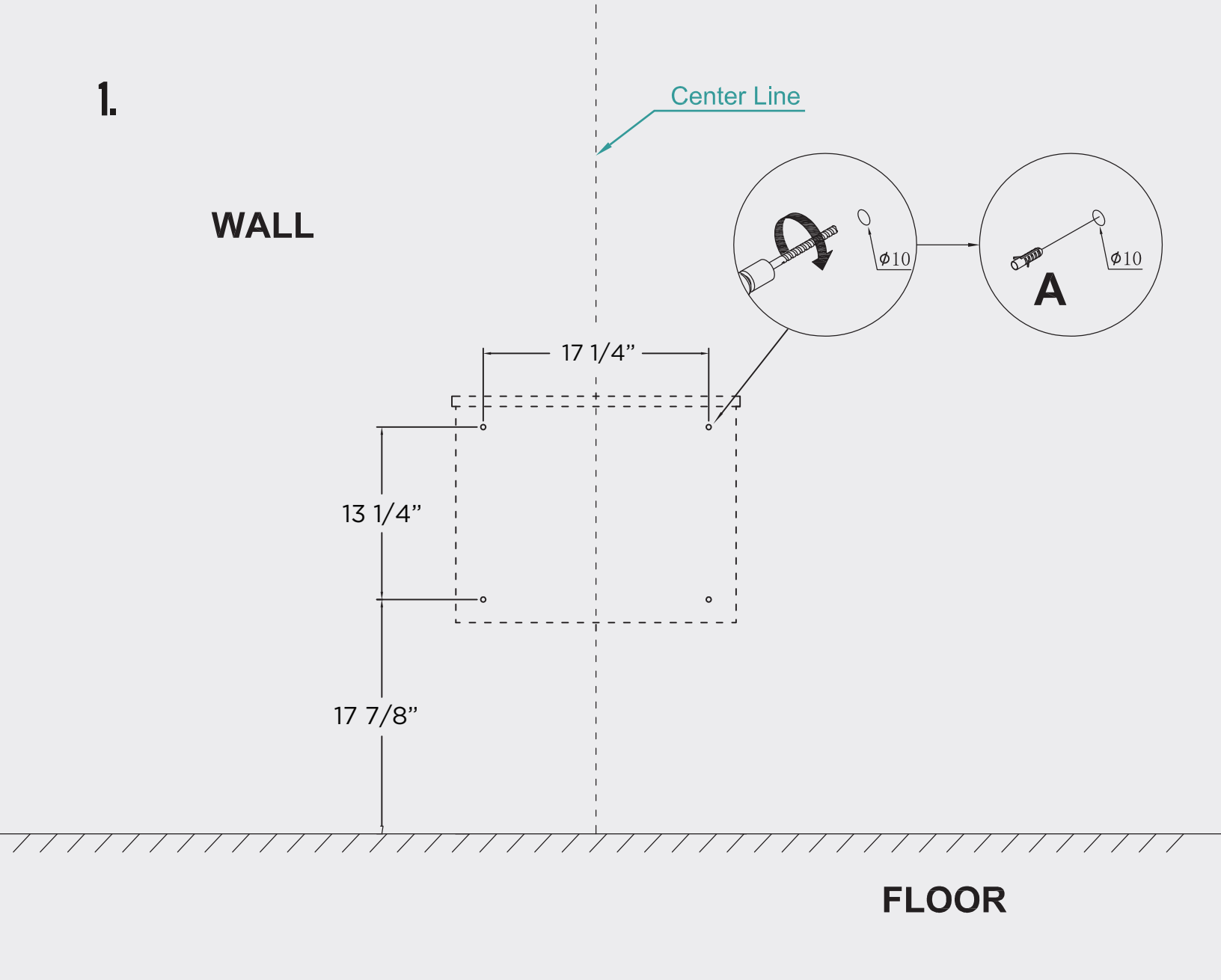

2.

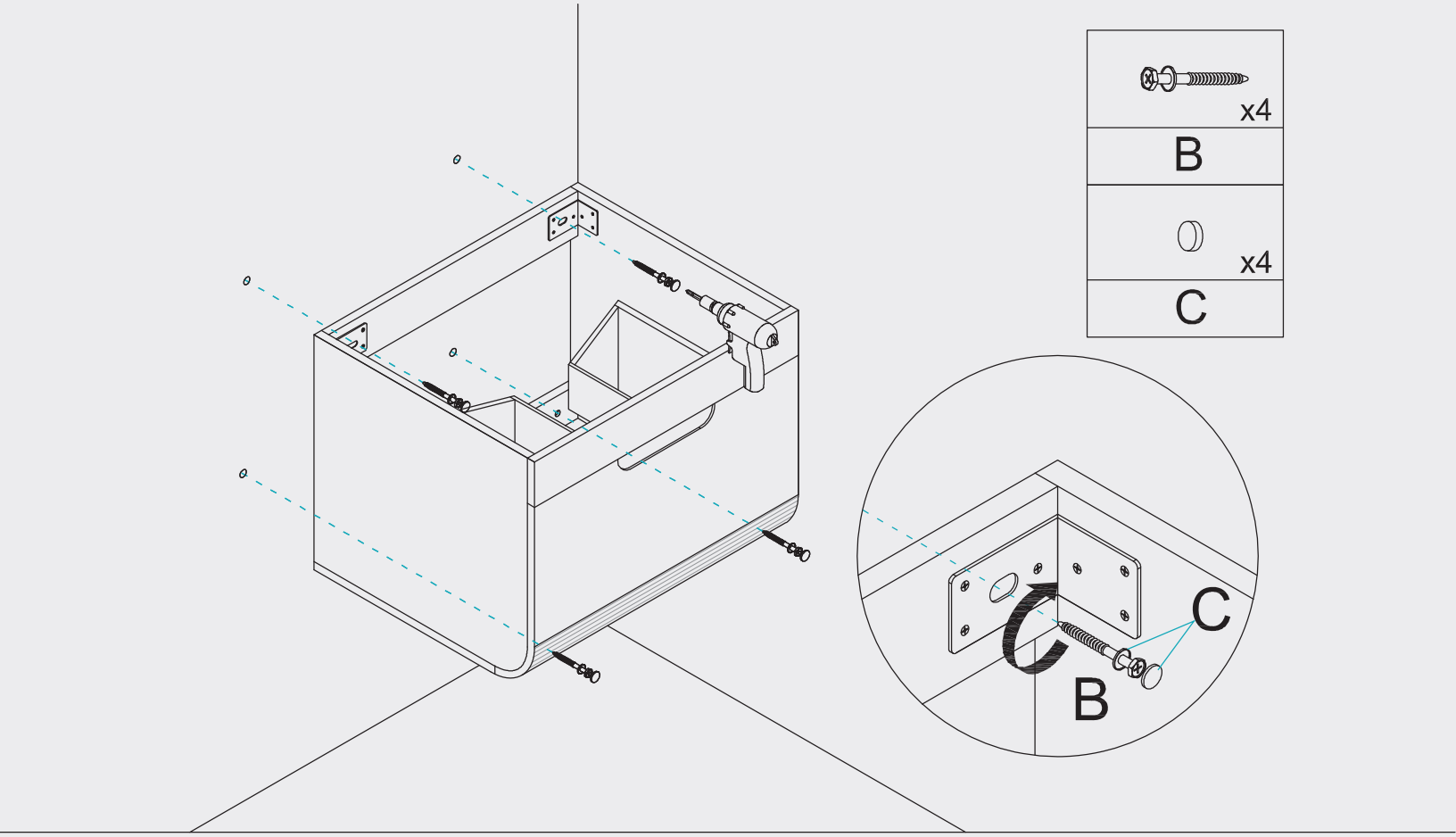

3.

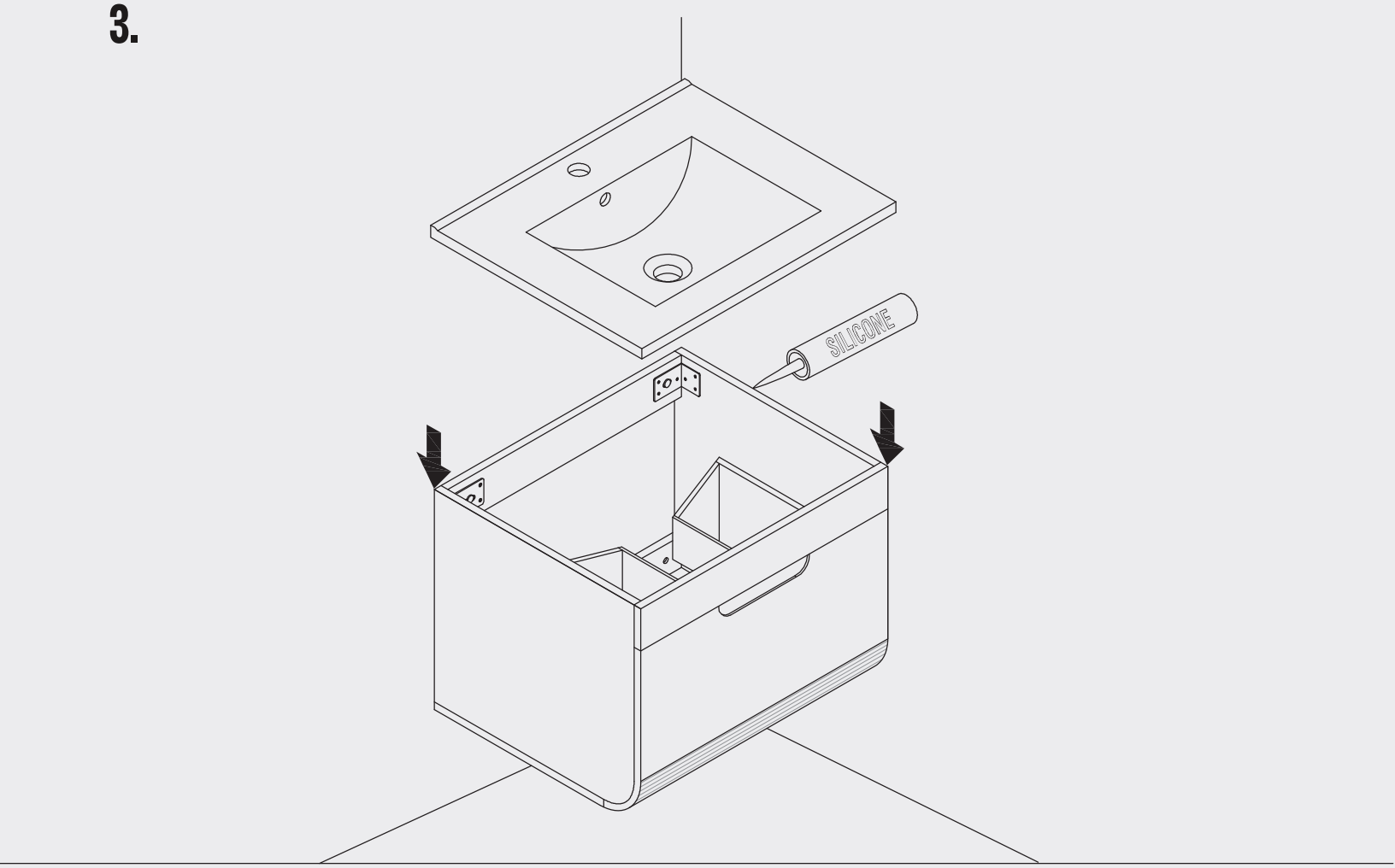

4.

DRAWER REMOVEL

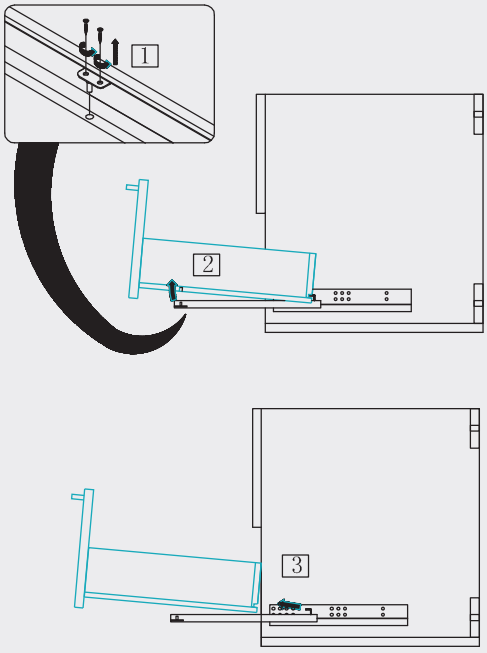

DRAWER INSTALLTION

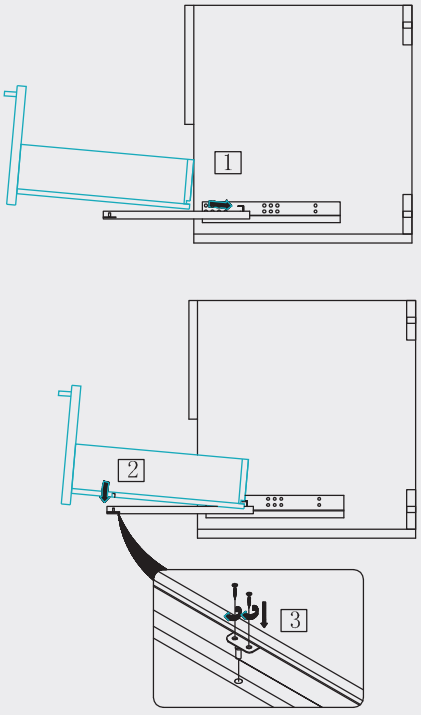

5. Finished

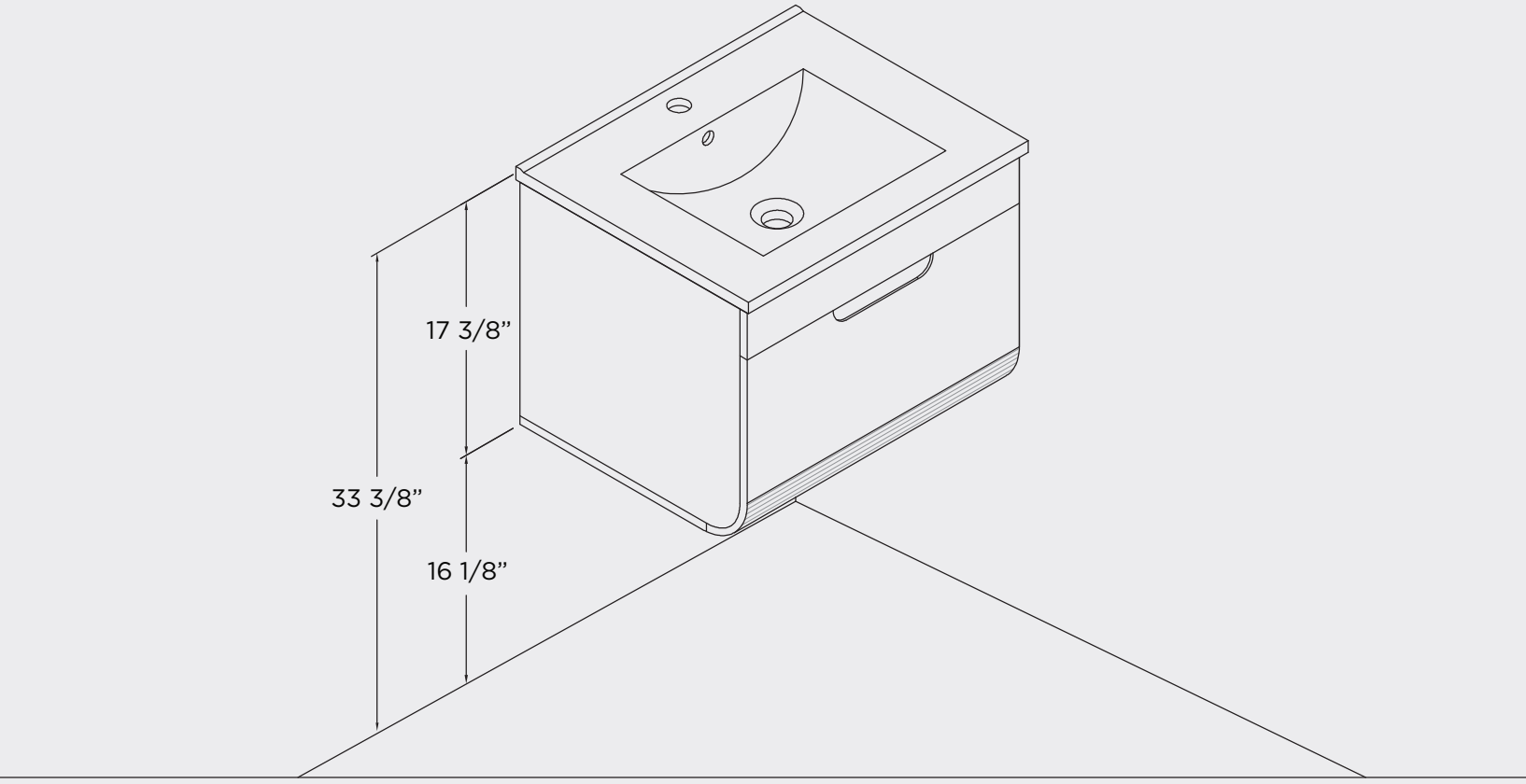

FINE FIXTURES

206 WEMBLY ROAD - NEW WINDSOR, NY 12553
P: 718.602.6060 F: 718.963.2082 - E: INFO@FINEFIXTURES.COM
TOLL FREE: 1.877.8FIXTURES

FINEFIXTURES.COM

RETAIN THIS INSTALLATION MANUAL FOR FUTURE REFERENCE.